DDRC1220FR-GL

Twelve-Channel Relay Controller

Specification Sheet

Controllers > Relay Controllers

Robust control of switched loads

The Dynalite DDRC1220FR-GL provides control of multiple types of switched loads. This general-purpose twelve-channel controller supports switched loads of up to 20 A per channel, up to a maximum device load of 180 A.

Key Features

- **Feed-through power circuit design** – Electrically equivalent to a 12 pole contactor, with the added advantage of each pole being separately controllable via the DyNet network.
- **Flexible mounting** – DIN rail mounting clips designed for installation into the distribution board supplying power to the controlled circuits.
- **Inbuilt diagnostic functionality** – Circuit run time tracking on each channel and Device Online/Offline status indication.
- **Multiple wiring schemes supported** – Controls single phase and neutral or three phase and neutral (star) wiring configurations.
- **Hardware override** – Service override switch accessible on front panel.

Dimensions

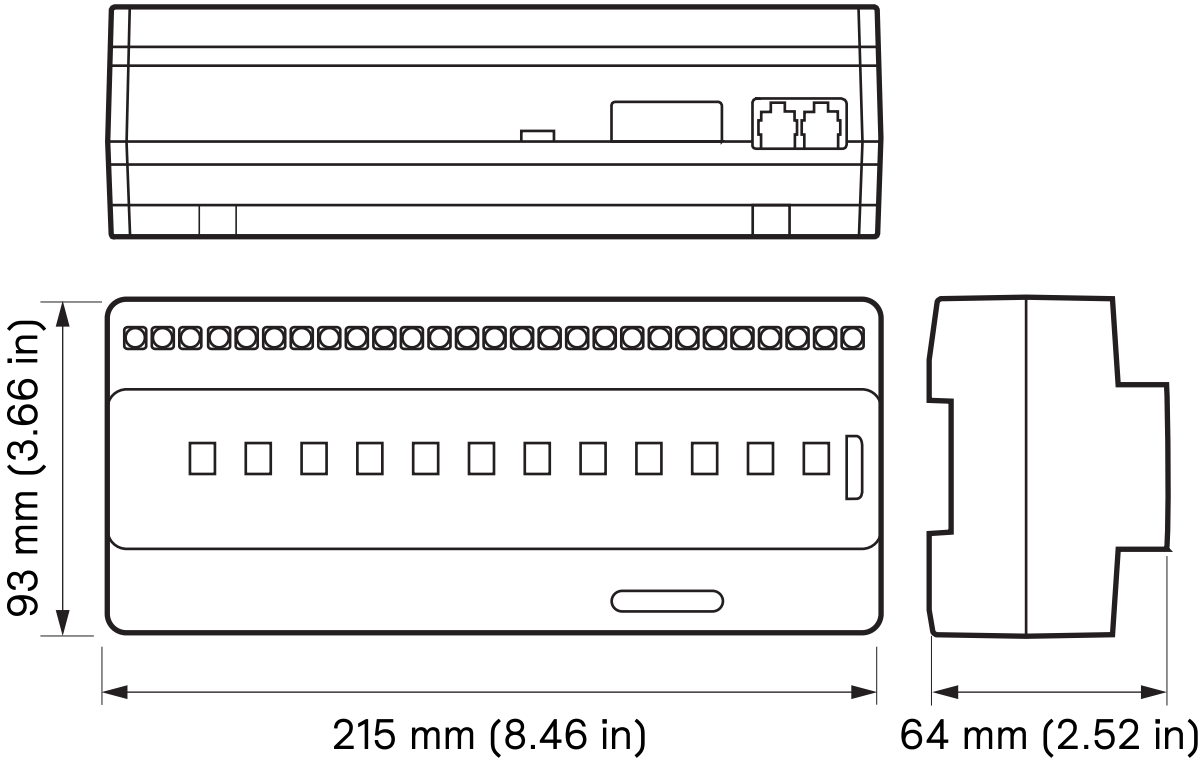

Specifications

Electrical

Supply Type	Single-phase
Supply Voltage	100-240 VAC
Supply Current	0.25 A
DyNet DC Output Voltage	12 VDC
DyNet DC Output Current	200 mA
Relay Outputs	12 x SPST feed-through with manual override
Maximum Device Load	180 A
Maximum CH-CH Voltage	300 VAC (UL) 400 VAC (CE)
Maximum CH-XX-CH Voltage	480 VAC (CH2-12 only) XX = unpopulated channel for isolation Refer to Installation Instructions for correct terminations for phase separation.
Supported Wiring Schemes	Single Phase and Neutral Three Phase and Neutral (Star)
IEC Overvoltage Category	III

Control

Communication Ports	1 x RS-485
Supported Protocols	DyNet DMX Rx
DMX Rx Channels	12
Dry Contact Inputs	1 (AUX)
User Controls	1 x service switch Manual override switch for each channel
Indicators	1 x diagnostic LED
Diagnostic Functions	Device online/offline status

Physical

Dimensions	93 x 215 x 64 mm (3.66 x 8.46 x 2.52 in)
Packed Weight	1.1 kg (2.43 lb)
Construction	Polycarbonate DIN rail enclosure (12 unit)
Serial Ports	2 x RJ12 1 x 6-way pluggable screw terminal
Serial Port Conductor Size	0.3-2.5 mm² (#22-12 AWG)
Load Terminals	12 x 2-way screw terminal
Load Terminal Conductor Size	≤5 mm² (#10+ AWG)
Supply Terminals	3 x screw terminal
Supply Terminal Conductor Size	≤5 mm² (#10+ AWG)

Environment

Operating Temperature	0° to 50°C ambient (32° to 122°F)
Storage/Transport Temperature	-25° to 70°C ambient (-13° to 158°F)
Relative Humidity	≤90% non-condensing
IEC Pollution Degree	II
Installation Note	For indoor installation only

Compliance

Certifications	CE, RCM, UL/cUL, FCC, ISED, UKCA, RoHS

Output Channel Ratings

Load Type	UL/cUL (per channel)
General Use	16 A, 277 VAC
Incandescent	16 A, 277 VAC
Standard Driver	16 A, 277 VAC
Electronic Driver	16 A, 277 VAC
Motor	16 FLA (1 HP) @ 120 VAC 14.5 FLA (2½ HP) @ 240 VAC 14.1 FLA (3 HP) @ 277 VAC
Inrush Current	500 A
Load Type	**CE (per channel)**
General Use	20 A, 240 VAC
Incandescent	20 A, 240 VAC
Standard Driver	20 A, 240 VAC
Electronic Driver	16 A, 277 VAC
Motor	16 FLA (1 HP) @ 120 VAC 14.5 FLA (2½ HP) @ 240 VAC 14.1 FLA (3 HP) @ 277 VAC
Inrush Current	500 A
Total Device Load	
≤ 180 A	

Electrical Drawing

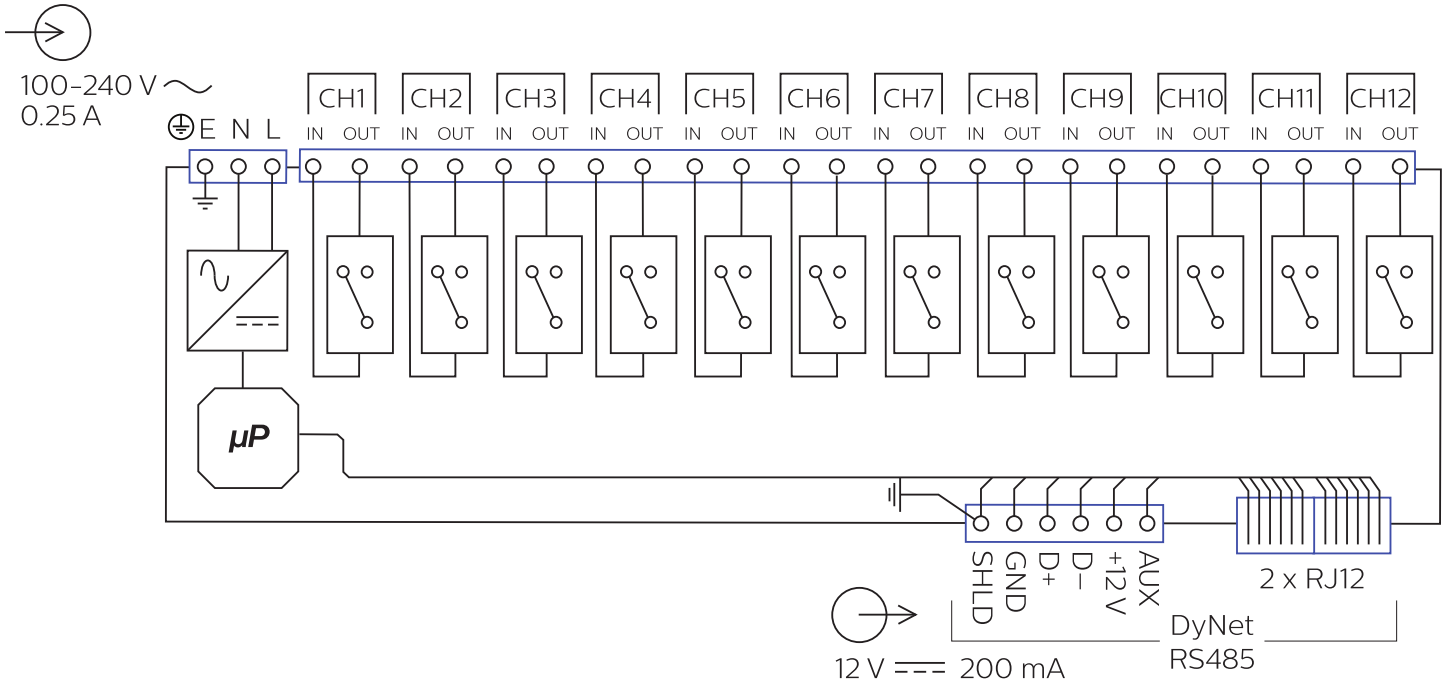

Ordering Codes

Product	12NC
DDRC1220FR-GL	913703243009

Policies and Notices

Specific Data Notice

This Specific Data Notice applies to the Controllers as specified in this product specification sheet (the **"Controller"**) that is part of or works with a Professional System offered by Signify for use in the European Union and supplements and/or corrects the Generic Data Notice For Professional Systems and Services that can be found at https://www.signify.com/global/resources/policies-announcements (the **"Generic Data Notice"**) by providing additional and/or more specific details specific to this Controller.

Terms starting with a capital in this Specific Data Notice will have the meaning as attributed thereto in the Generic Data Notice, unless explicitly defined otherwise in this document.

When used in a Signify professional lighting system in combination with a Dynalite Gateway with either the Dynalite Switch App, Dynalite System Builder, Dynalite System Manager, or Dynalite Cloud, the Controller can generate the Data as specified below:

- Operational Data: Lighting control commands based on the configured control logic in the product via the DyNet network
- Sensor Data: This product does not generate any sensor data.

The type and volume and format of Data that is generated depends on the actual devices connected to the Controller, the product and/or software configuration. For further details on data generation capabilities of such devices, please check the product specification sheets of such devices.

The Data generated in this combination is communicated via the network to the gateway and is stored on the gateway. If configured to do so, the gateway can forward the Data to Dynalite Cloud or to Dynalite System Manager. For applicable retention period and means of access to Data that is Readily Available Data, please refer to the Dynalite Cloud software specification sheet. Data cannot be accessed directly from the Controller. Data can be accessed from the Gateway using Dynalite System Builder or directly from any of the APIs of the Gateway. The Gateway will persist the Data for 28 days on a rolling basis.

This Specific Data Notice may be changed by Signify from time to time. The current version of this notice will apply and can be obtained at request via the point of contact as indicated in paragraph 7 of the Generic Data Notice.

© 2026 Signify Holding. All rights reserved. Specifications are subject to change without notice. No representation or warranty as to the accuracy or completeness of the information included herein is given and any liability for any action in reliance thereon is disclaimed. All trademarks are owned by Signify Holding or their respective owners.