SAVE THESE INSTRUCTIONS

DRBBBE

Revolution three-gang EU

Buttons & V8 module

signify Dynalite

Installation Instructions

Instructions d'installation
Installationsanweisungen
Instrucciones de instalación
Istruzioni per l'installazione
Installatie-instructies
インストール手順
安装指南
إرشادات التركيب

Please ignore other instructions in the box.
Veuillez ignorer les autres instructions dans la boîte
Bitte ignorieren Sie andere Anweisungen in der Box

Por favor, ignore otras instrucciones en la caja
Si prega di ignorare le altre istruzioni nella confezione
Negeer andere instructies in de doos

ボックス内の他の指示は無視してください
请忽略包装盒中的其他说明
يرجى تجاهل التعليمات الأخرى في المربع

Devices must be installed by a qualified electrician in accordance with all national and local electrical and construction codes and regulations.

Les appareils doivent être installés par un électricien diplômé conformément à tous les codes et réglementations électriques et de construction nationaux et locaux.

Die Geräte sind von einem qualifizierten Elektriker in Übereinstimmung mit allen geltenden Vorschriften zu installieren.

Los dispositivos deben ser instalados por un electricista calificado y cumpliendo todas las normas y regulaciones, tanto nacionales como locales, sobre instalaciones eléctricas y obras.

I dispositivi devono essere installati da un elettricista qualificato in conformità con le norme locali e nazionali vigenti in materia di costruzioni edilizie e installazione di impianti elettrici.

De apparaten moeten worden aangebracht door een gekwalificeerde elektricien en in overeenstemming met alle nationale en plaatselijke elektriciteits- en bouwvoorschriften.

装置を取り付ける際は、資格のある電気技師に依頼し、国および地域の電気および建設に関するすべての法令に従ってください。

根据国家/地区及当地的电气与建筑规范和法规，该设备必须由有资质的电工进行安装。

يجب تركيب الأجهزة من قبل فني كهربائي مؤهل وفقًا لكافة قوانين ولوائح التركيب الكهربائي المحلي والوطني.

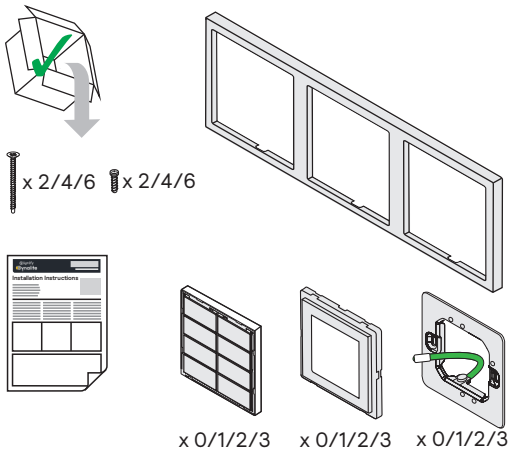

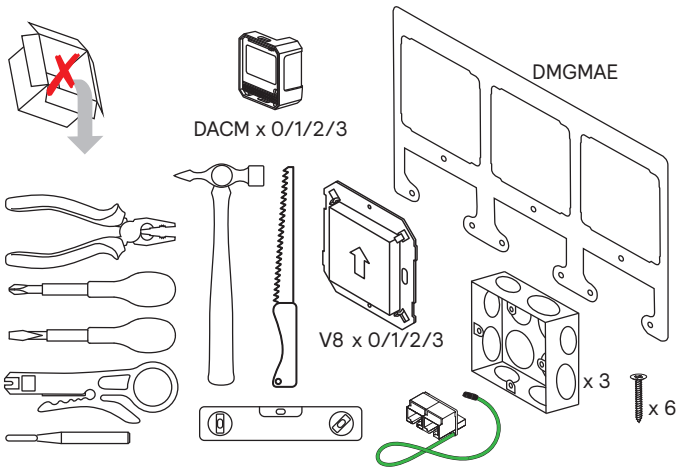

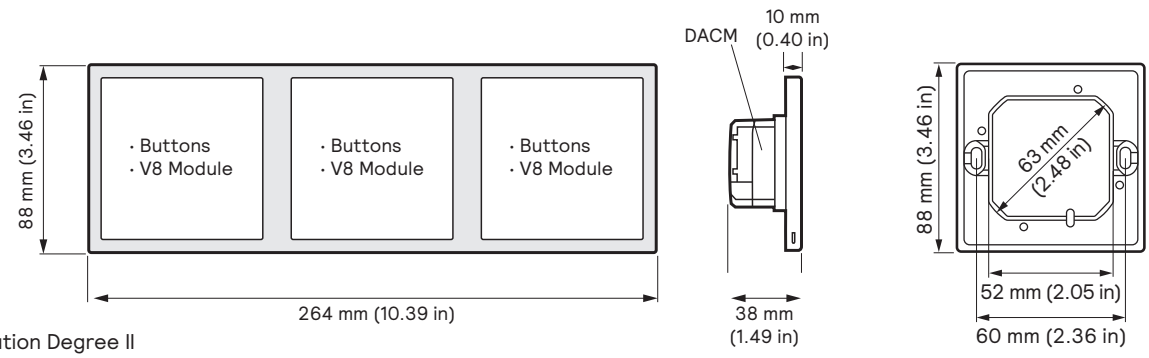

Pollution Degree II

Please refer to SIMON V8 specifications for V8 module dimensions.

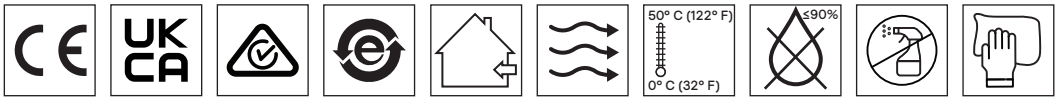

1

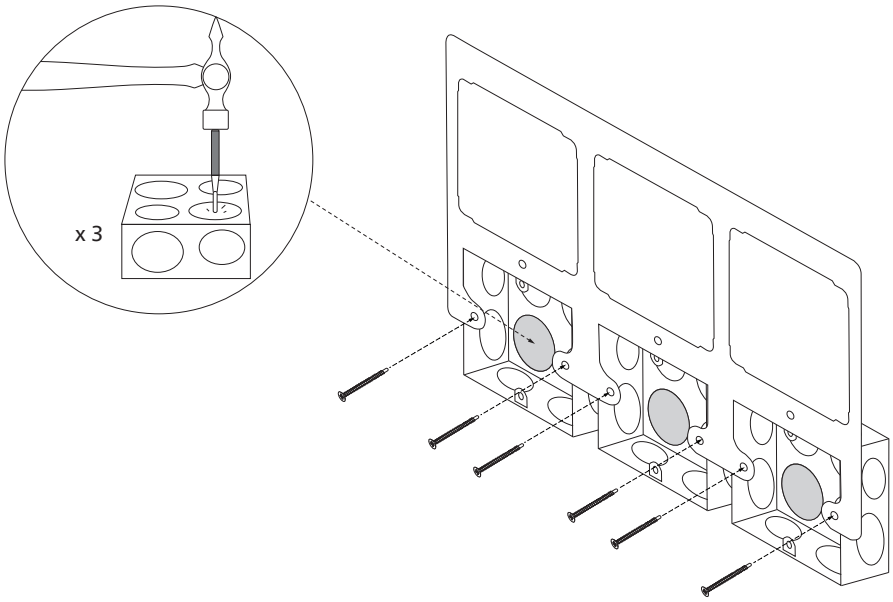

2

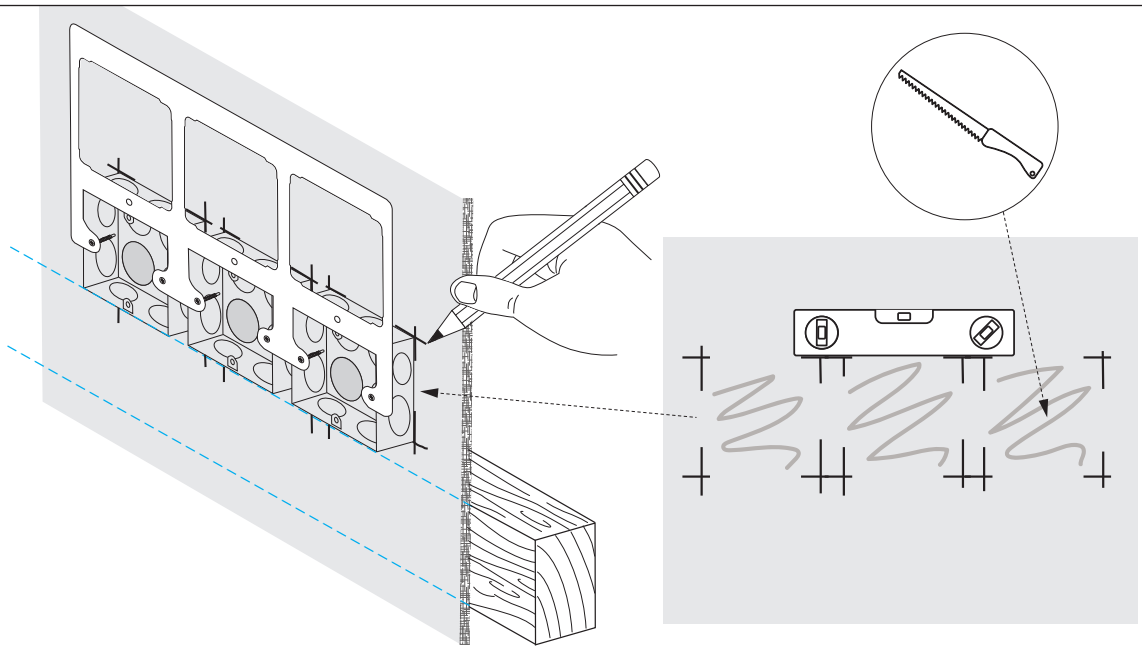

3

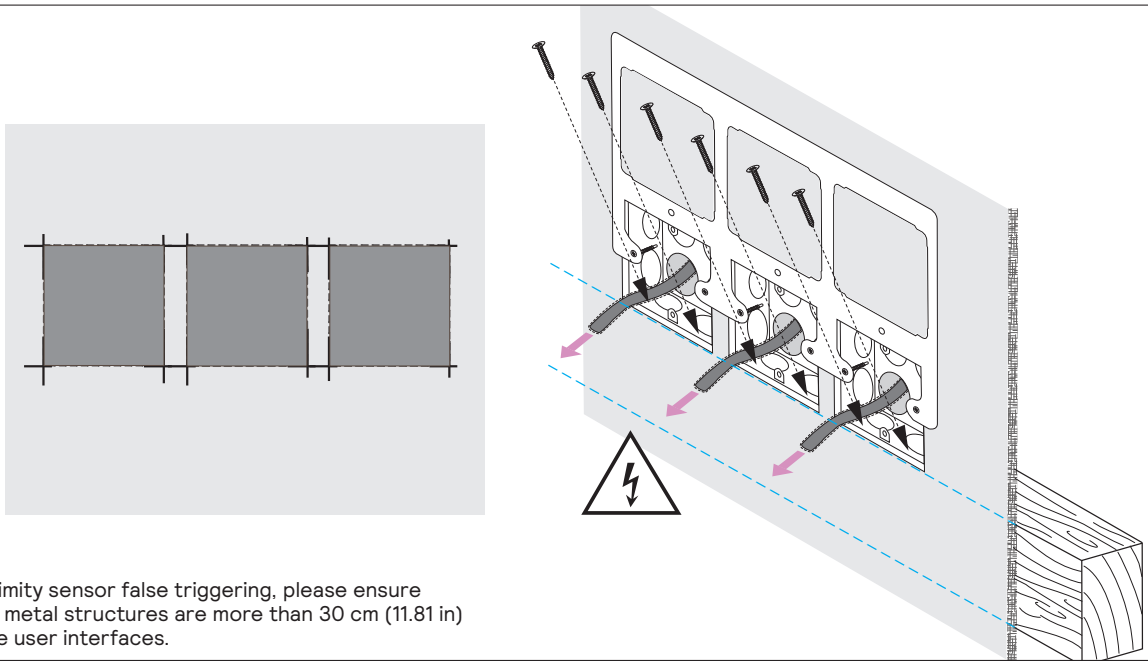

To avoid proximity sensor false triggering, please ensure all unearthed metal structures are more than 30 cm (11.81 in) away from the user interfaces.

4

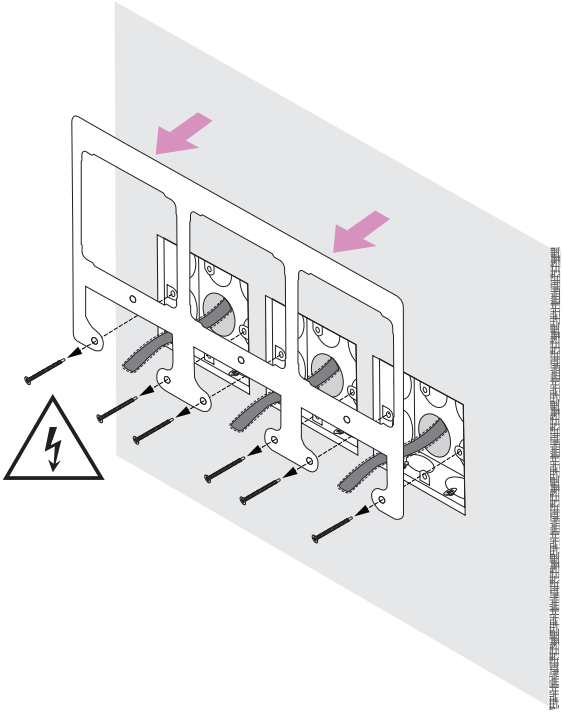

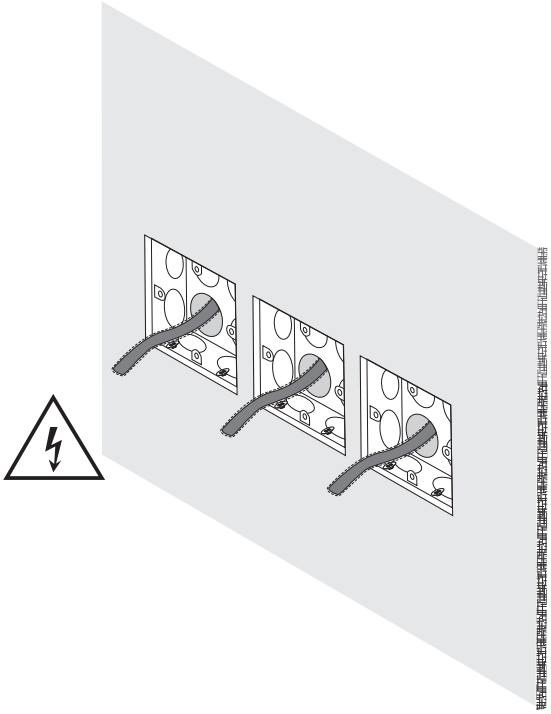

5 A Buttons

Do not tighten screws
Ne pas serrer les vis
Schrauben nicht festziehen
No apriete los tornillos
Non serrare le viti
Schroeven niet vastdraaien
ネジを締めないでください
不要拧紧螺丝
لا تقم بتشديد البراغي

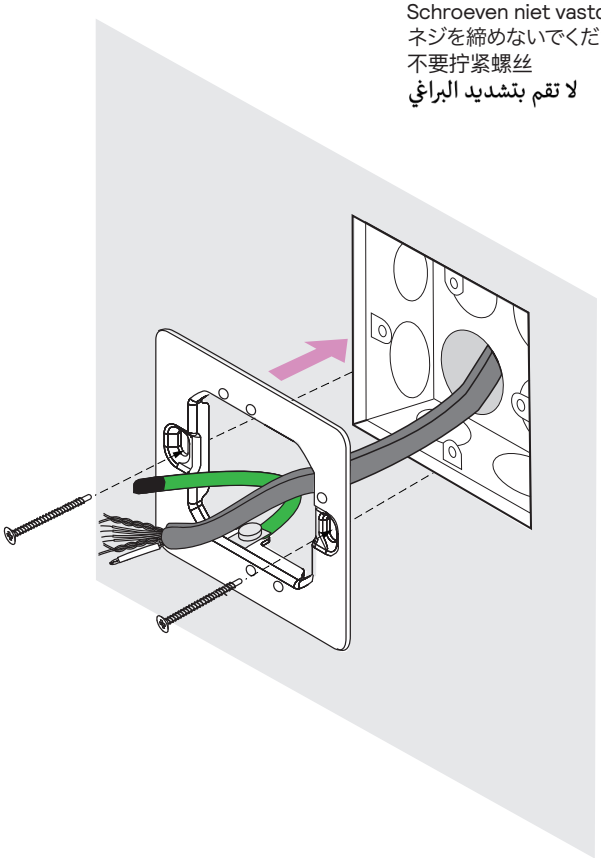

5 B

For V8 module installation, please refer to SIMON Electric in your region.

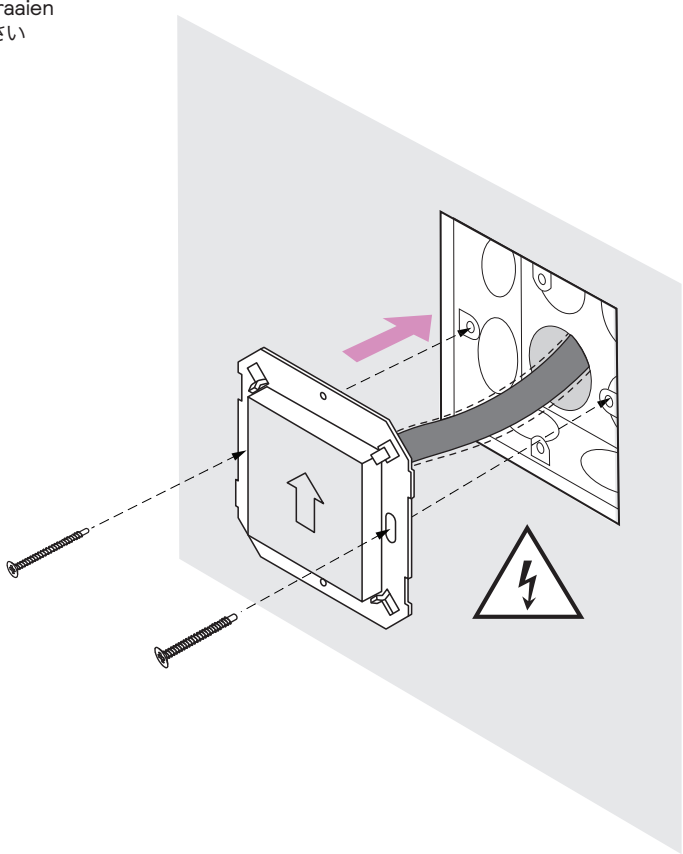

6

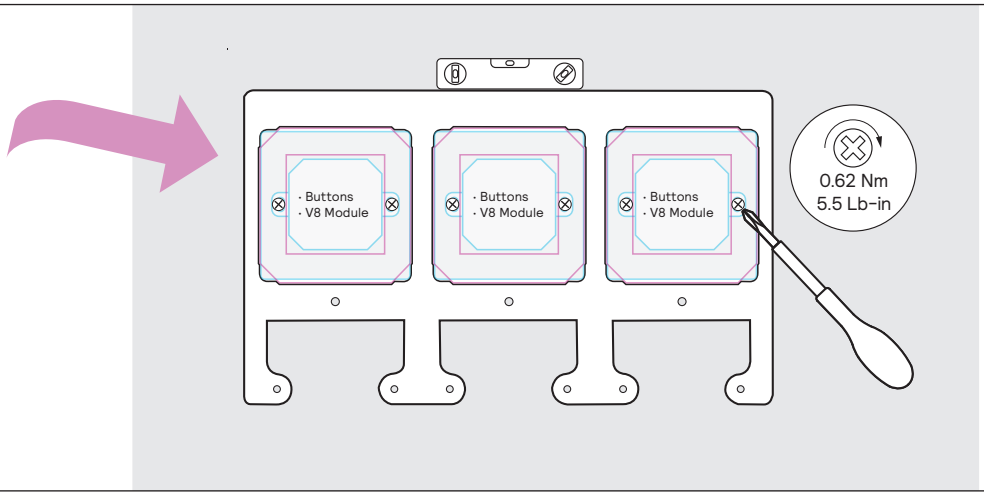

7

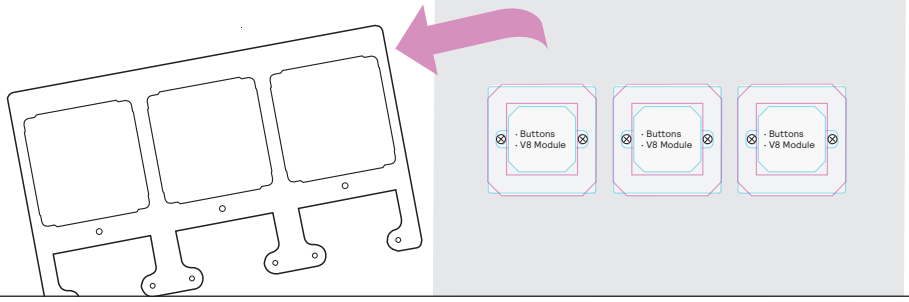

V8 → 12

8 Buttons

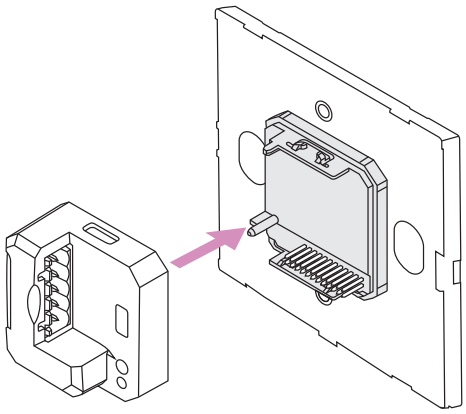

IEC Overvoltage Category II

9 Buttons

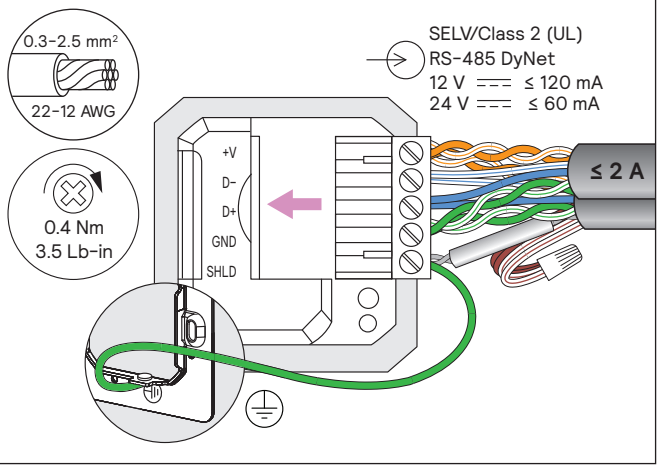

10 Buttons

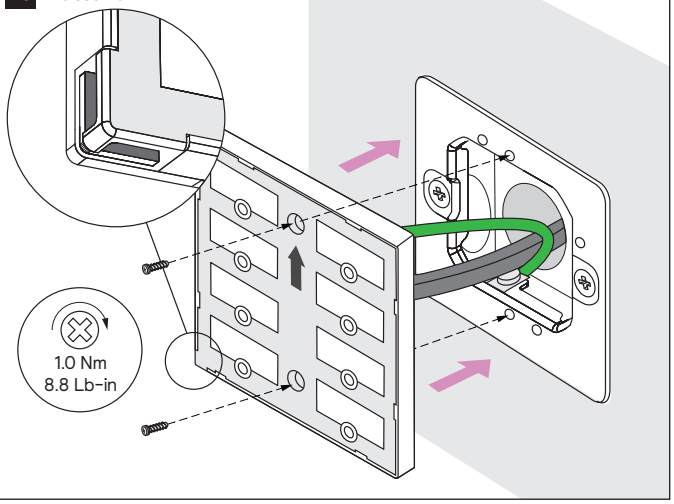

11 Buttons

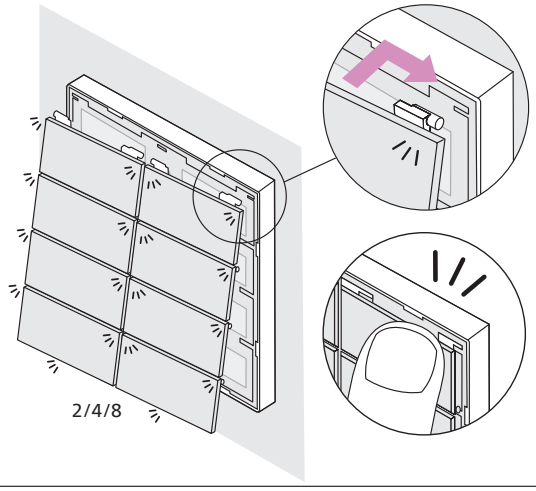

12 V8 Module

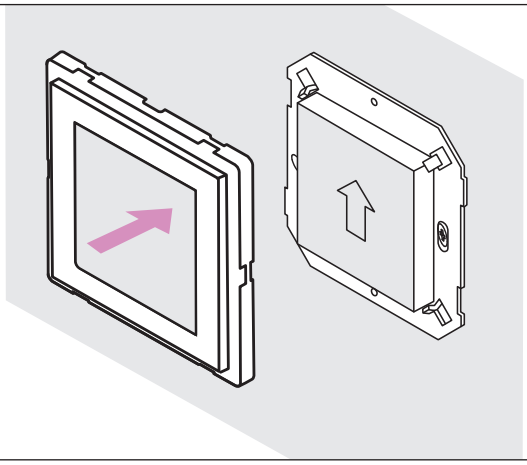

13

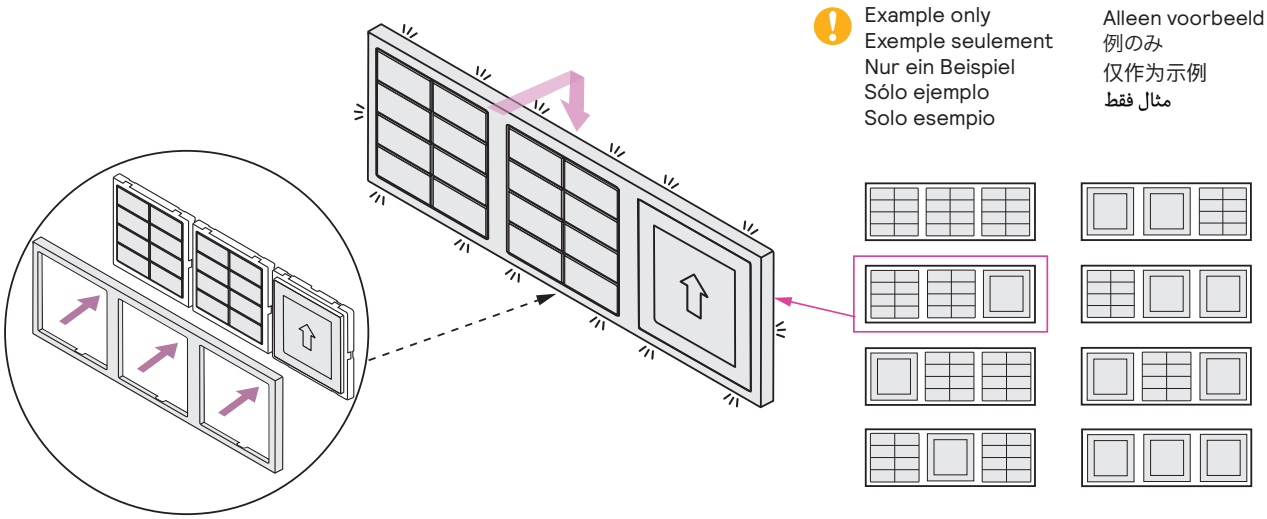

14

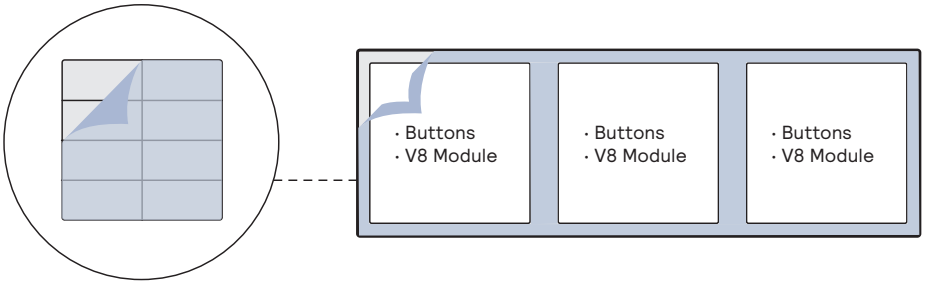

15

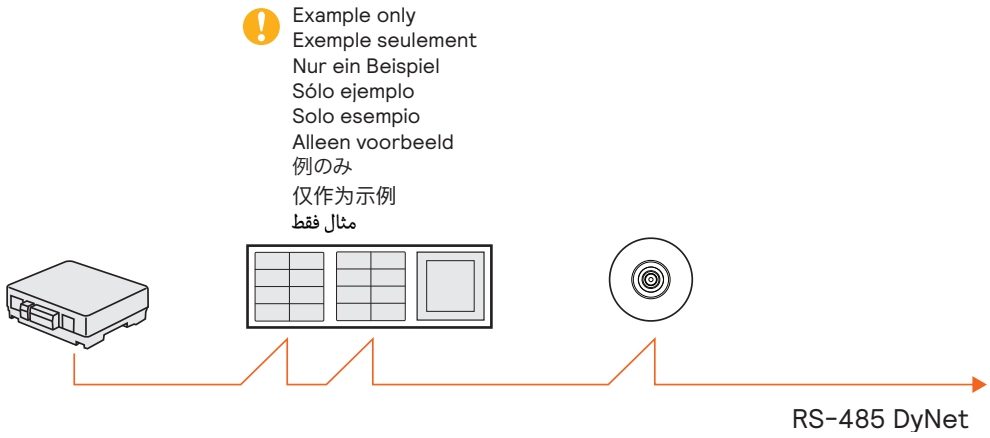

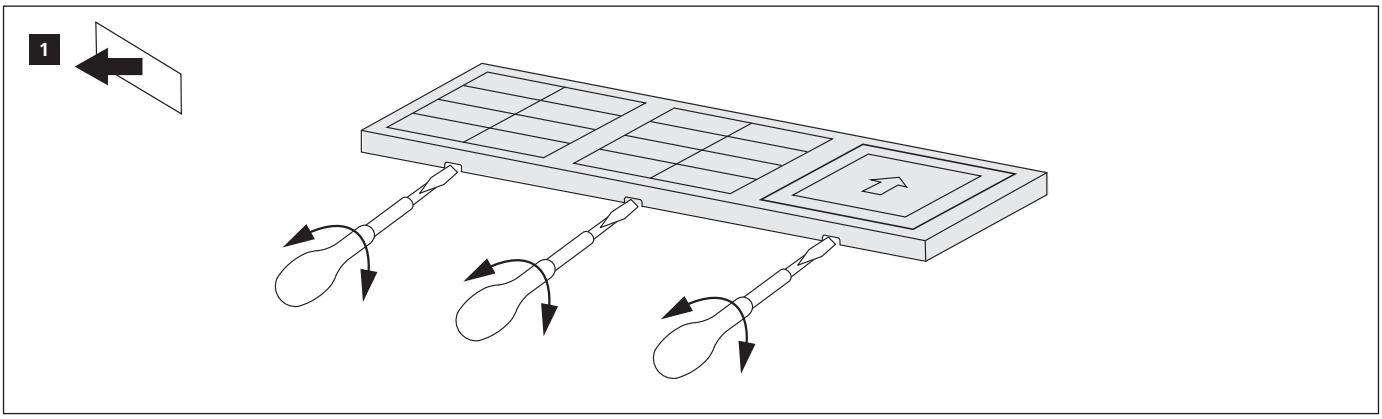

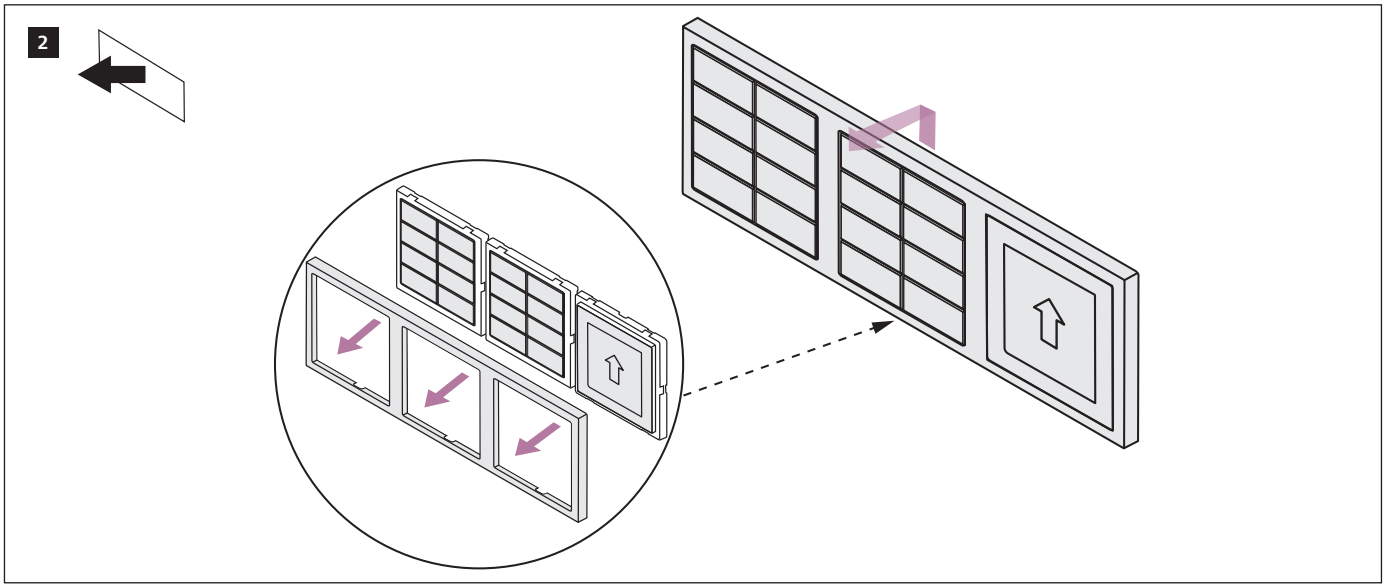

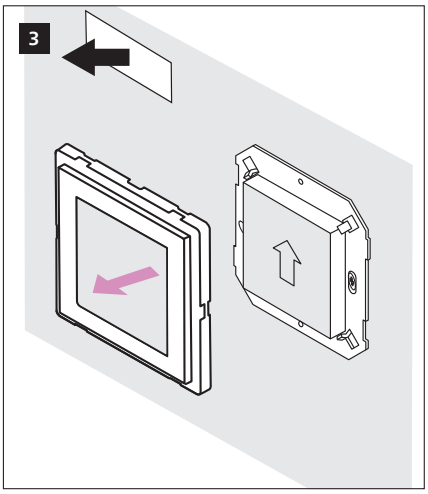

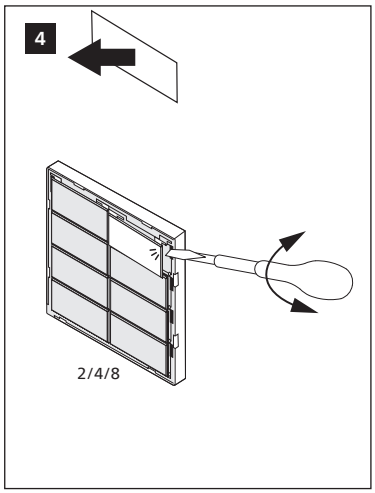

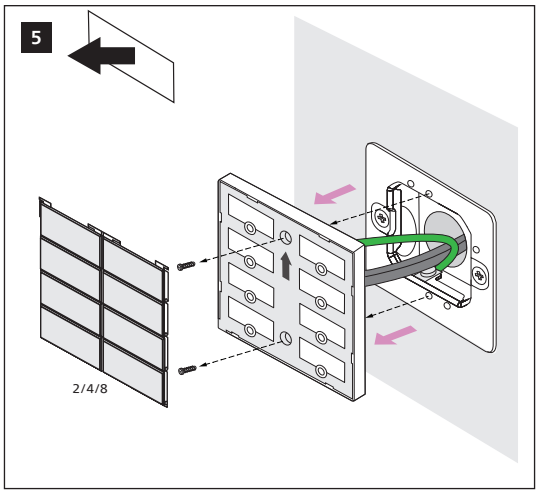

Installation of a home and building automation and control system shall comply with IEC 60364 (all parts). The temperature limits and current-carrying capacities for the communication wires specified in IEC 60364-5-52 shall not be exceeded.

Do not connect inputs to mains.

Disconnect power before connecting or separating modules.

Refer to Service Guide for full cleaning recommendations.

© 2026 Signify Holding. All rights reserved. Specifications are subject to change without notice. No representation or warranty as to the accuracy or completeness of the information included herein is given and any liability for any action in reliance thereon is disclaimed. Trademarks are owned by Signify Holding or their respective owners.

signify Dynalite

www.dynalite.com

AZZ 612BBB 1026 R11

1180-012-01 rev 11