PDRxA

Revolution Button US/ANZ

signify Dynalite

Installation Instructions

Instructions d'installation
Installationsanweisungen
Instrucciones de instalación
Istruzioni per l'installazione
Installatie-instructies
インストール手順
安装指南
إرشادات التركيب

Devices must be installed by a qualified electrician in accordance with all national and local electrical and construction codes and regulations.

Les appareils doivent être installés par un électricien diplômé conformément à tous les codes et réglementations électriques et de construction nationaux et locaux.

Die Geräte sind von einem qualifizierten Elektriker in Übereinstimmung mit allen geltenden Vorschriften zu installieren.

Los dispositivos deben ser instalados por un electricista calificado y cumpliendo todas las normas y regulaciones, tanto nacionales como locales, sobre instalaciones eléctricas y obras.

I dispositivi devono essere installati da un elettricista qualificato in conformità con le norme locali e nazionali vigenti in materia di costruzioni edilizie e installazione di impianti elettrici.

De apparaten moeten worden aangebracht door een gekwalificeerde elektricien en in overeenstemming met alle nationale en plaatselijke elektriciteits- en bouwvoorschriften.

装置を取り付ける際は、資格のある電気技師に依頼し、国および地域の電気および建設に関するすべての法令に従ってください。

根据国家/地区及当地的电气与建筑规范和法规，该设备必须由有资质的电工进行安装。

يجب تركيب الأجهزة من قبل فني كهربائي مؤهل وفقًا لكافة قوانين ولوائح التركيب الكهربائي المحلي والوطني.

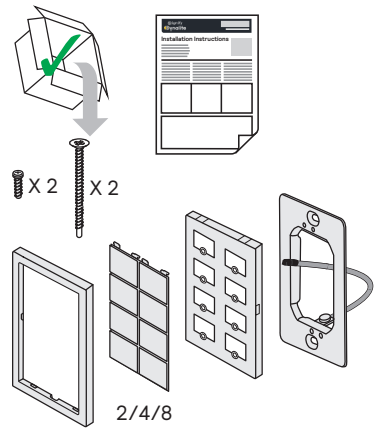

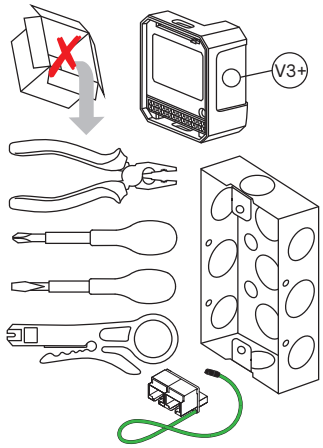

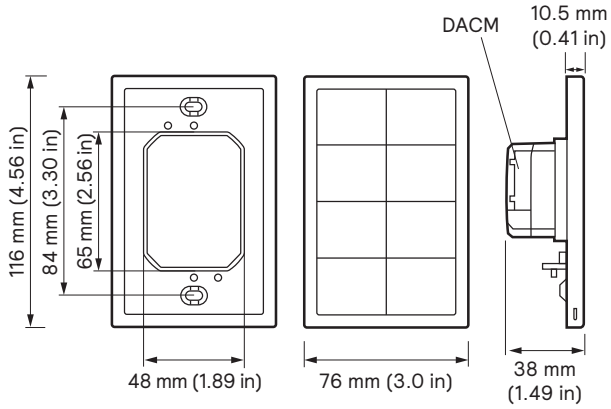

1

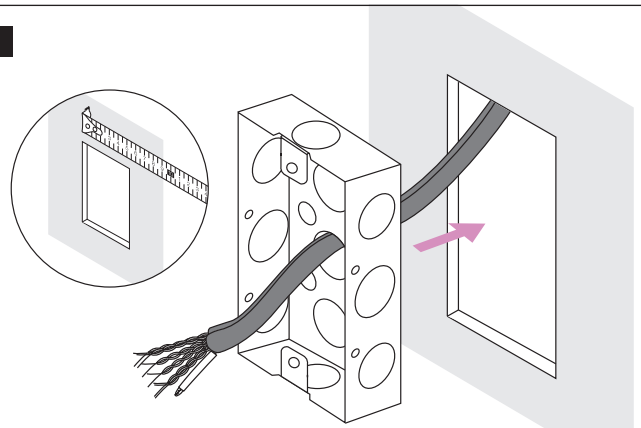

IEC Pollution Degree II

2

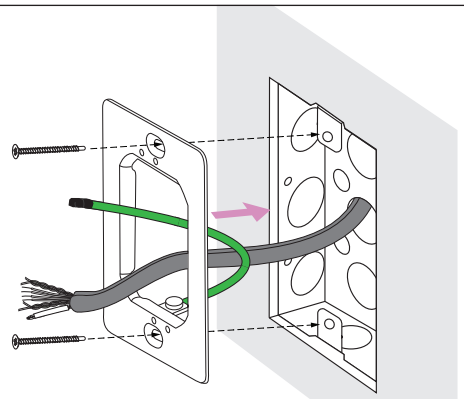

To avoid proximity sensor false triggering, please ensure all unearthed metal structures and mains cables are more than 30 cm (11.81 in) away from the user interface.

50° C (122° F)
0° C (32° F)
≤90%

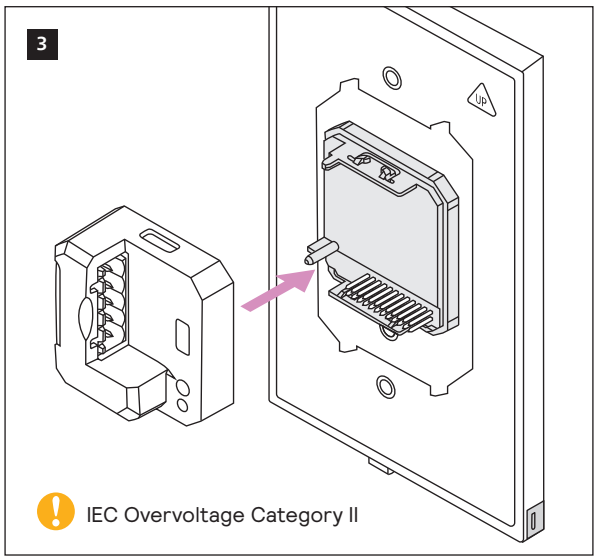

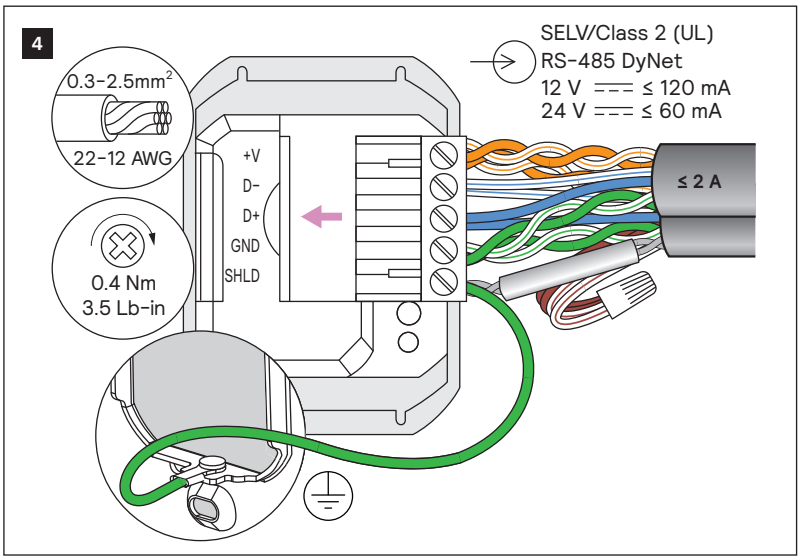

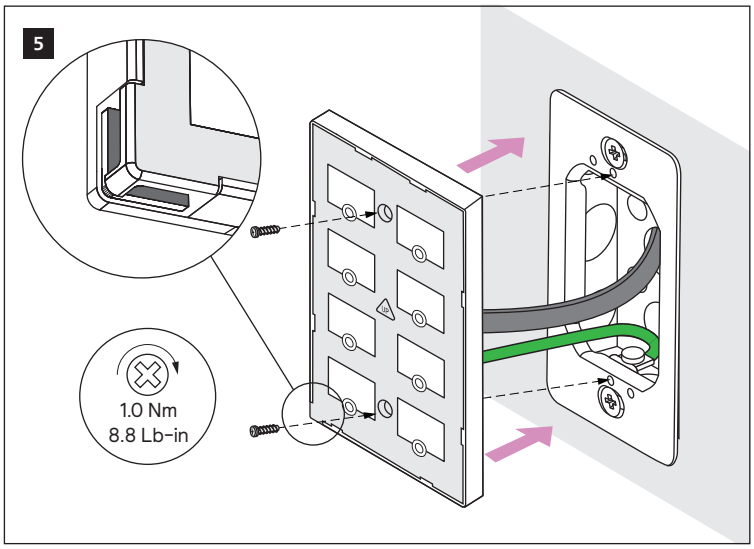

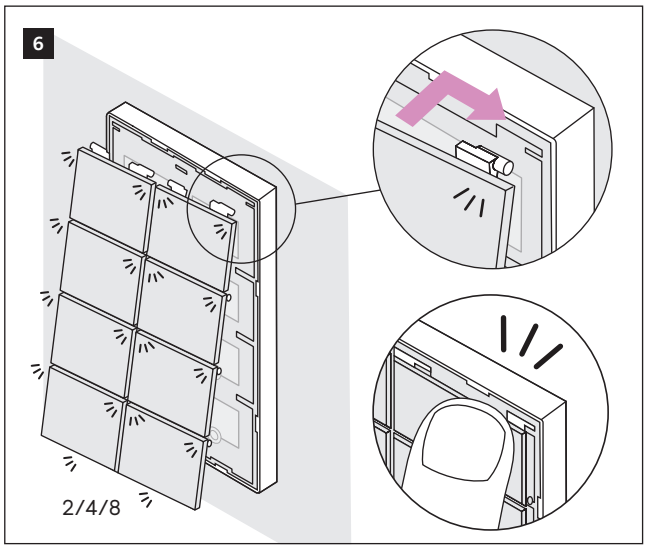

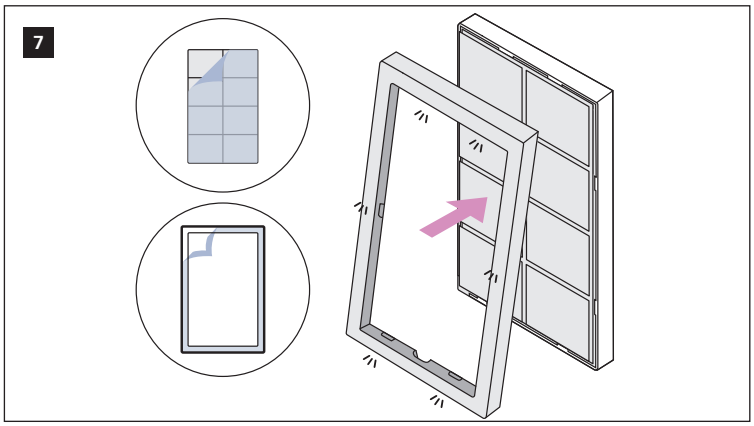

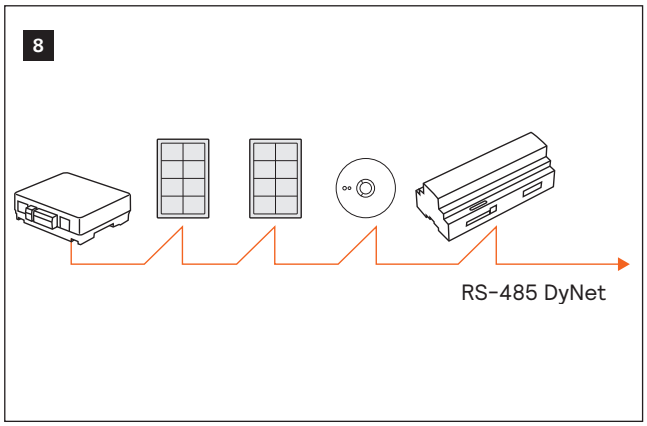

Federal Communications Commission (FCC) Compliance Notice: Radio Frequency Notice – This equipment has been tested and found to comply with the limits for a Class B digital device, pursuant to part 15 of the FCC Rules. These limits are designed to provide reasonable protection against harmful interference in a residential installation. This equipment generates, uses, and can radiate radio frequency energy and, if not installed and used in accordance with the instructions, may cause harmful interference to radio communications. However, there is no guarantee that interference will not occur in a particular installation. If this equipment does cause harmful interference to radio or television reception, which can be determined by turning the equipment off and on, the user is encouraged to try to correct the interference by one or more of the following measures: Reorient or relocate the receiving antenna. Increase the separation between the equipment and receiver. Connect the equipment into an outlet on a circuit different from that to which the receiver is connected. Consult the dealer or an experienced radio/TV technician for help. Any modifications not approved by the manufacturer of this device could void the user's authority to operate this device.

This device complies with part 15 of the FCC Rules. Operation is subject to the following two conditions: (1) This device may not cause harmful interference, and (2) this device must accept any interference received, including interference that may cause undesired operation.

This Class B digital apparatus complies with Canadian ICES-003: CAN ICES-003(B)/NMB-003(B). Cet appareil numerique de la Classe B est conforme a la norme NMB-003 du Canada: CAN ICES-003(B)/NMB-003(B).

Installation of a home and building automation and control system shall comply with IEC 60364 (all parts). The temperature limits and current-carrying capacities for the communication wires specified in IEC 60364-5-52 shall not be exceeded.

Do not connect inputs to mains.

Disconnect power before connecting or separating modules.

Refer to Service Guide for full cleaning recommendations.

© 2026 Signify Holding. All rights reserved. Specifications are subject to change without notice. No representation or warranty as to the accuracy or completeness of the information included herein is given and any liability for any action in reliance thereon is disclaimed. Trademarks are owned by Signify Holding or their respective owners.

signify
Dynalite

www.dynalite.com

AZZ 567 1026 R10