PDRxE

Revolution Button EU

Signify Dynalite

Installation Instructions

Instructions d'installation
Installationsanweisungen
Instrucciones de instalación
Istruzioni per l'installazione
Installatie-instructies
インストール手順
安装指南
إرشادات التركيب

Devices must be installed by a qualified electrician in accordance with all national and local electrical and construction codes and regulations.

Les appareils doivent être installés par un électricien diplômé conformément à tous les codes et réglementations électriques et de construction nationaux et locaux.

Die Geräte sind von einem qualifizierten Elektriker in Übereinstimmung mit allen geltenden Vorschriften zu installieren.

Los dispositivos deben ser instalados por un electricista calificado y cumpliendo todas las normas y regulaciones, tanto nacionales como locales, sobre instalaciones eléctricas y obras.

I dispositivi devono essere installati da un elettricista qualificato in conformità con le norme locali e nazionali vigenti in materia di costruzioni edilizie e installazione di impianti elettrici.

De apparaten moeten worden aangebracht door een gekwalificeerde elektricien en in overeenstemming met alle nationale en plaatselijke elektriciteits- en bouwvoorschriften.

装置を取り付ける際は、資格のある電気技師に依頼し、国および地域の電気および建設に関するすべての法令に従ってください。

根据国家/地区及当地的电气与建筑规范和法规，该设备必须由有资质的电工进行安装。

يجب تركيب الأجهزة من قبل فني كهربائي مؤهل وفقًا لكافة قوانين ولوائح التركيب الكهربائي المحلي والوطني.

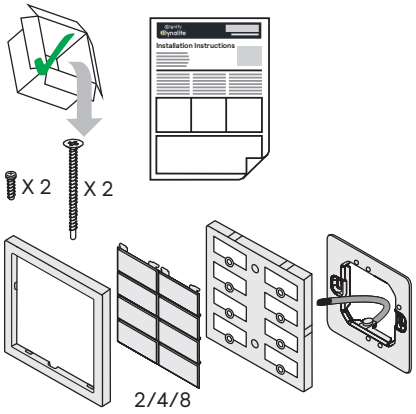

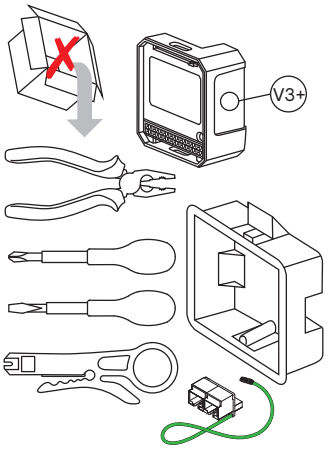

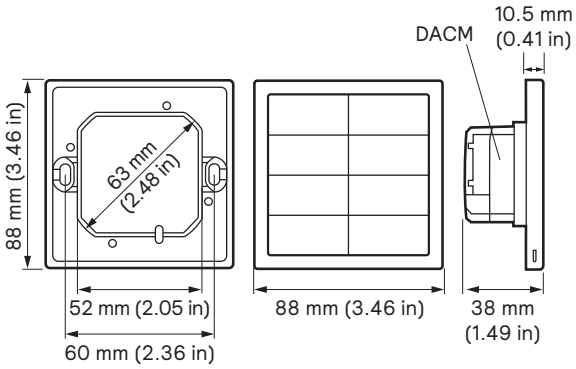

1

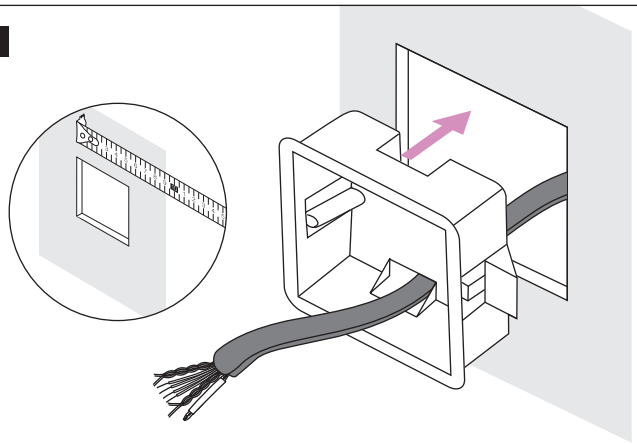

IEC Pollution Degree II

2

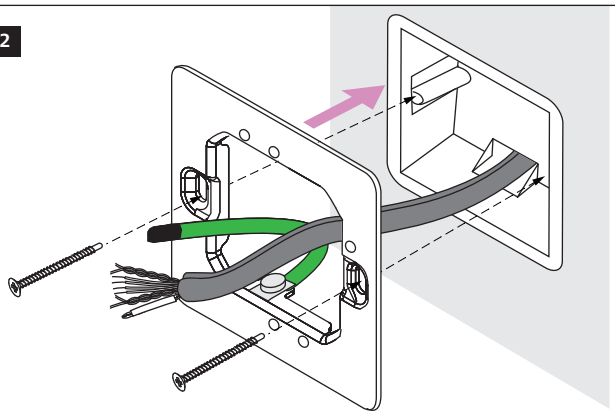

To avoid proximity sensor false triggering, please ensure all unearthed metal structures and mains cables are more than 30 cm (11.81 in) away from the user interface.

50° C (122° F)
0° C (32° F)
≤90%

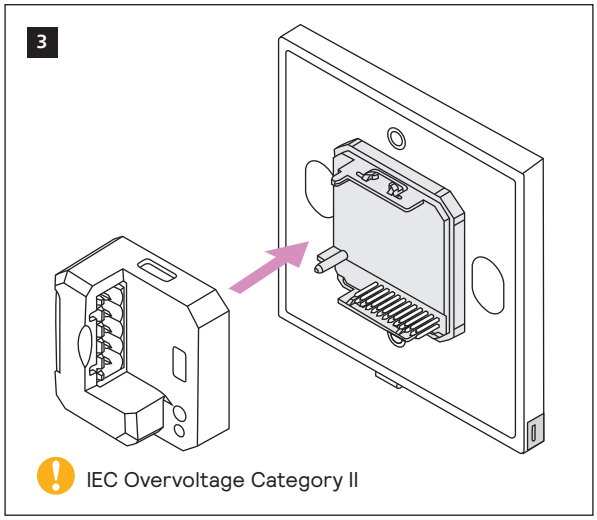

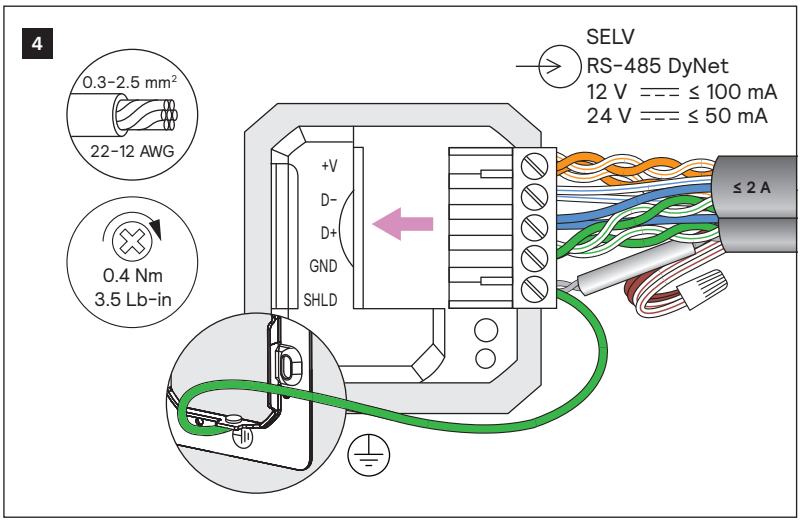

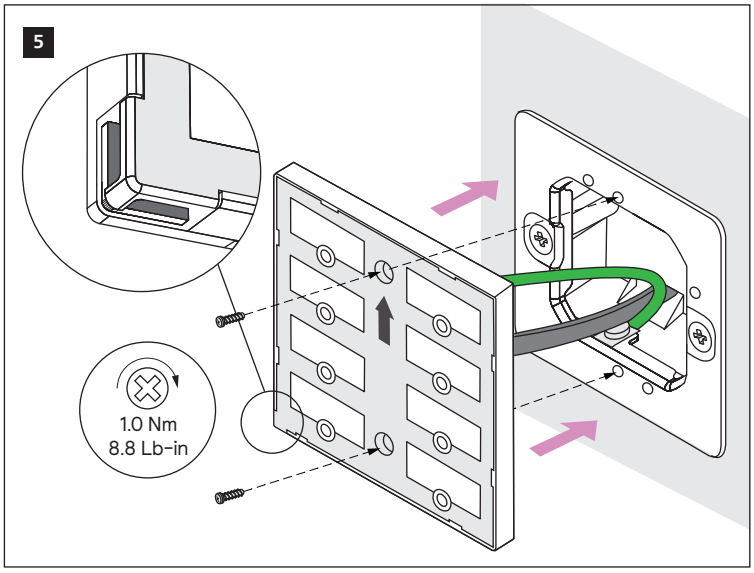

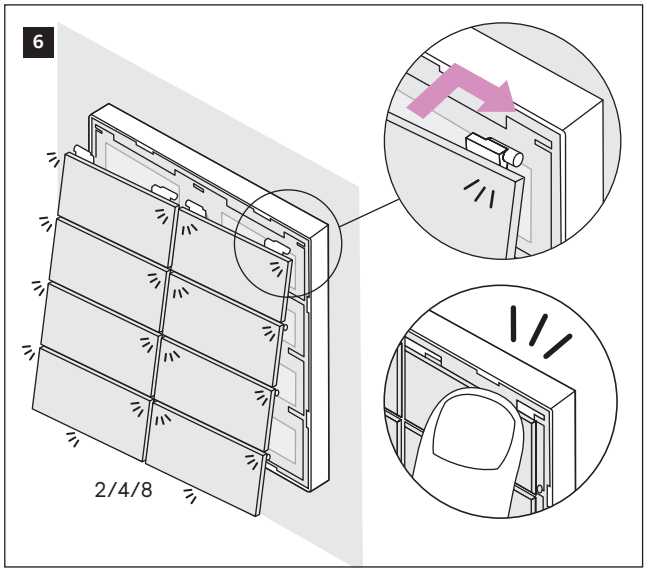

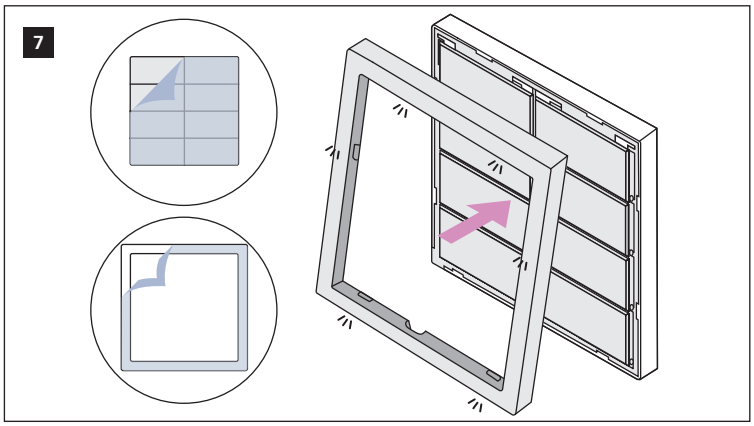

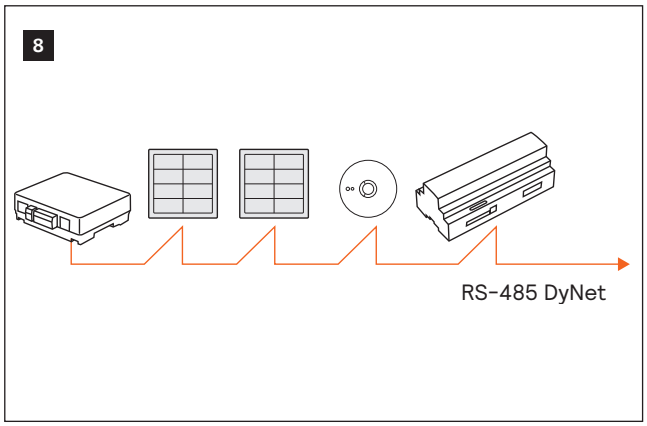

Installation of a home and building automation and control system shall comply with IEC 60364 (all parts). The temperature limits and current-carrying capacities for the communication wires specified in IEC 60364-5-52 shall not be exceeded.

- Do not connect inputs to mains.
- Disconnect power before connecting or separating modules.
- Refer to Service Guide for full cleaning recommendations.

© 2026 Signify Holding. All rights reserved. Specifications are subject to change without notice. No representation or warranty as to the accuracy or completeness of the information included herein is given and any liability for any action in reliance thereon is disclaimed. Trademarks are owned by Signify Holding or their respective owners.

signify
Dynalite

www.dynalite.com

AZZ 536 1026 R15